Co-Mac
FOR HARD TO FIND HARDWARE
www.comac.co.nz

Co-Mac Group Ltd
For Hard To Find Hardware

PO Box 240, Hawera, 4610
06 350 0015
orders@comac.co.nz
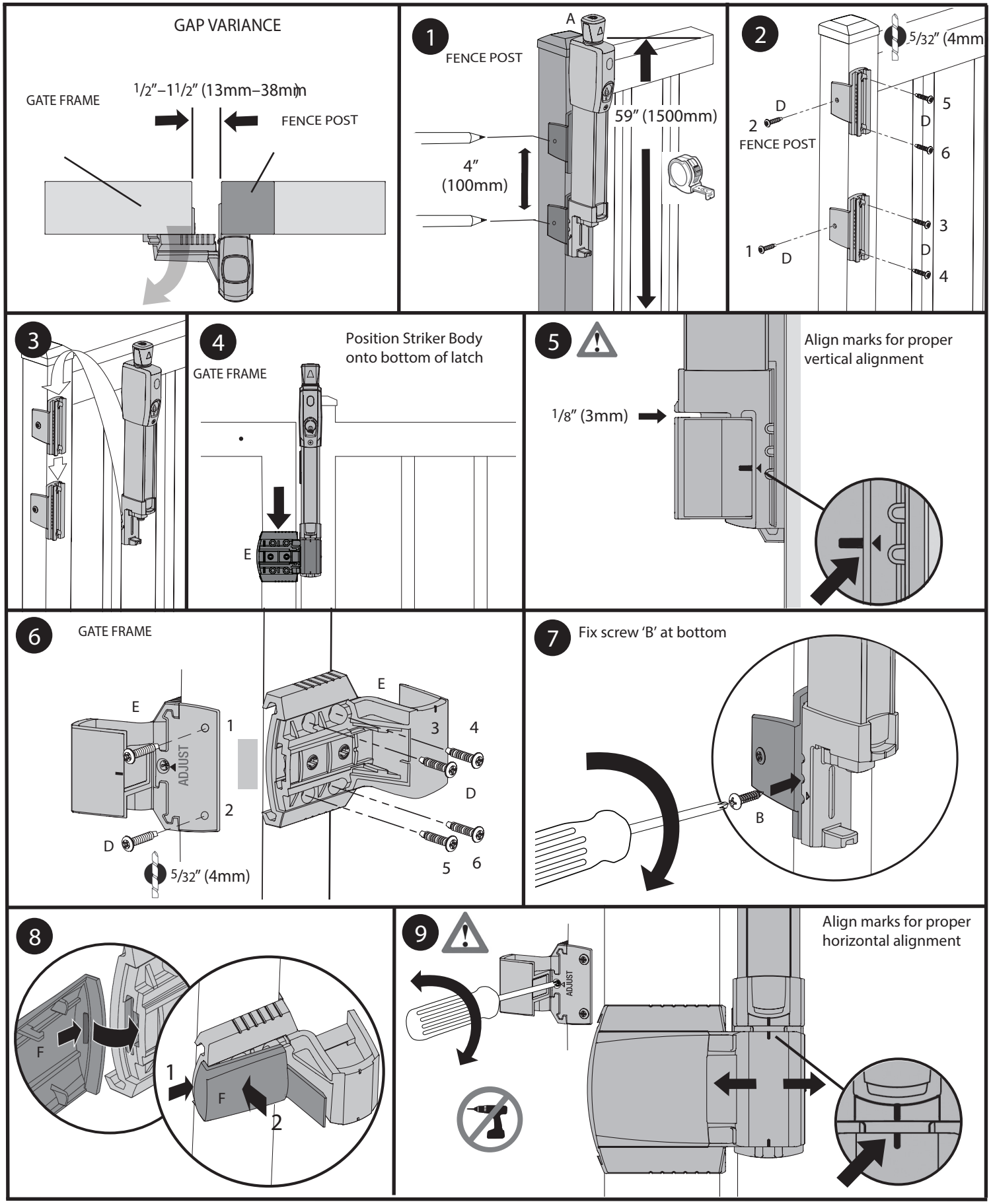
Installation Instructions: Code 4694